DATE	DRN
12/20/2018	SY
1/11/2019	SY

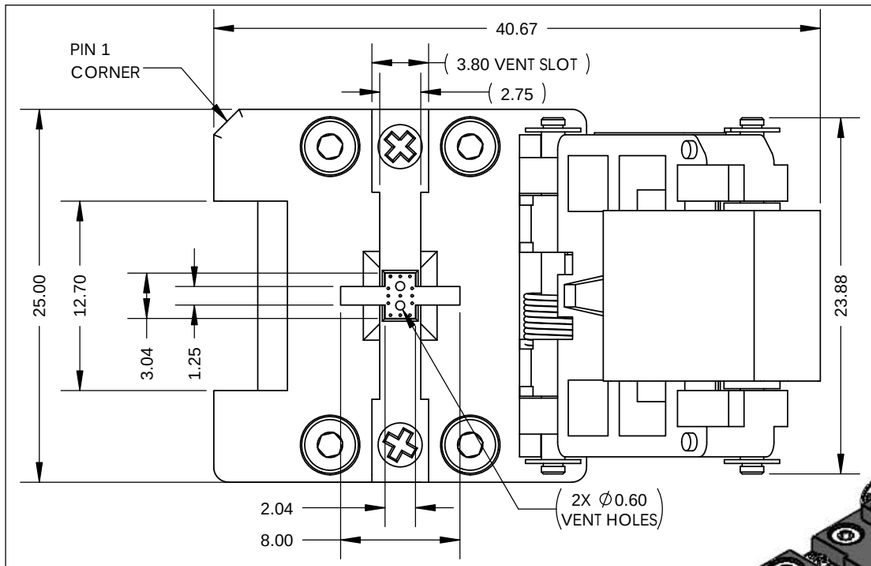

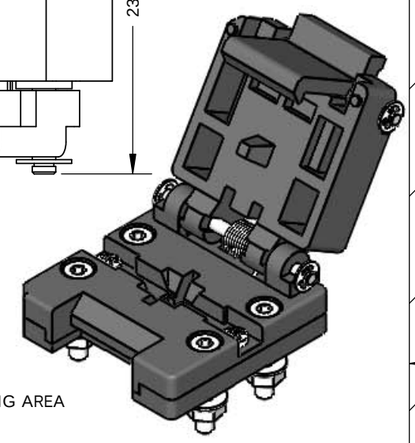

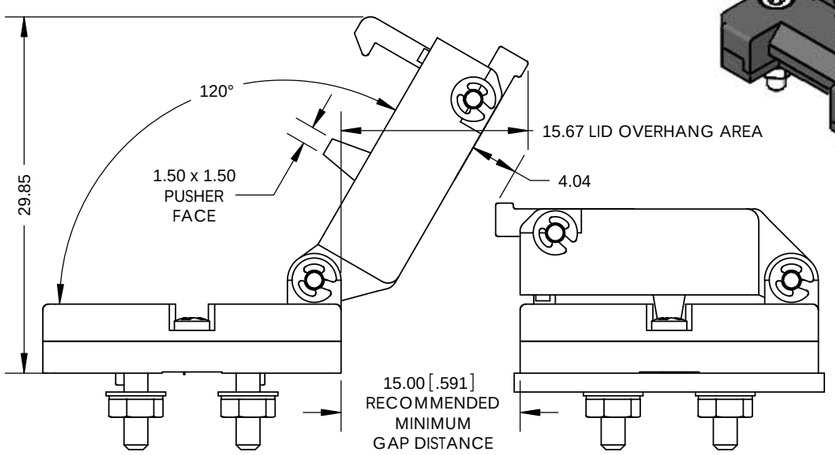

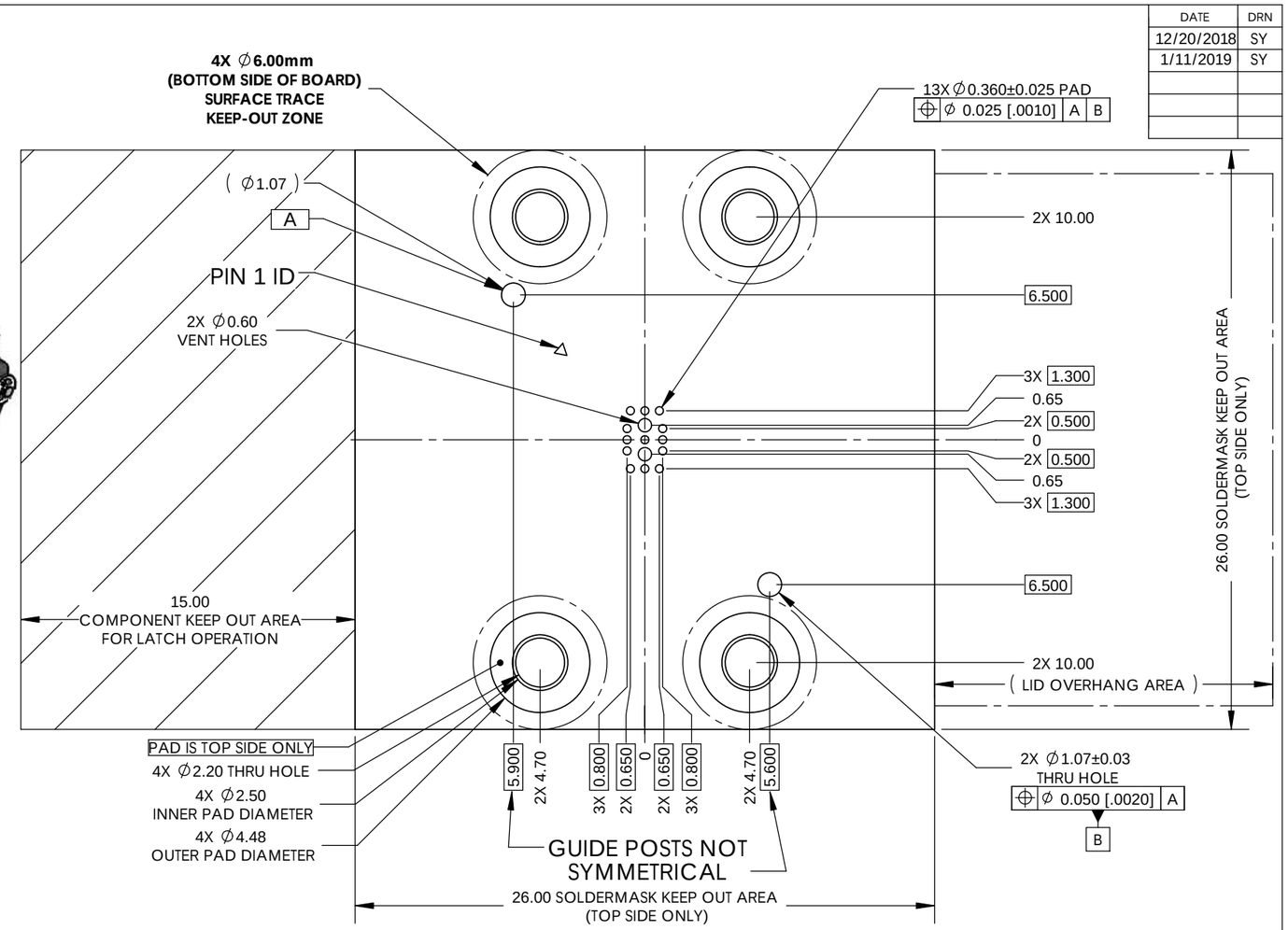

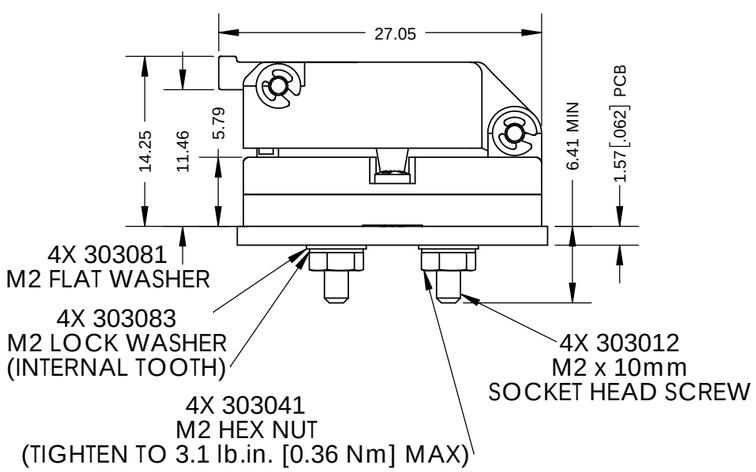

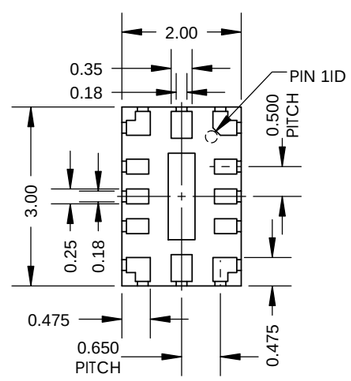

DEVICE
(BOTTOM VIEW)

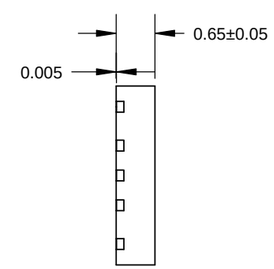

TOP VIEW OF BOARD

NOTES:

1. TOOLS REQUIRED FOR ASSEMBLY: 1.5mm ALLEN TORQUE DRIVER, 4mm HEX SOCKET DRIVER
2. PCB PAD PLATING: 30 µin. HARD Au OVER 300 µin. Ni OVER 1oz. MIN. Cu
3. CONTACT PLATING: 30 µin. Au OVER 75 µin. Ni
4. PLASTIC MATERIAL: ULTEM 2210EPR
5. ALL Au PADS SHOULD BE SAME THICKNESS.
6. BOARD LAYOUT TOLERANCE: ± 0.05mm.
7. FILLED VIAS ARE ACCEPTABLE PROVIDED FILLER MATERIAL CAN WITHSTAND CONTACT FORCE AT BURN-IN TEMPERATURE.
8. SOCKET SHOULD FIT FREELY INTO PCB.

P/N: 12QHCY13020

PROPRIETARY

FEATURES:
- PIN = H033LL2A (OPERATING AT 13.4gF)
- 1X CENTER PIN
- 2X VENT HOLES THRU SOCKET & PCB
- HORIZONTAL VENTING IN NEST
- PADS RECESSED 0.005mm
- REVERSE SEATING PLANE FOR HAST APPLICATION
- TWEEZER SLOTS
- SOLID PLASTIC LID

THIS DRAWING IS SUBJECT TO CHANGE WITHOUT NOTICE. PLEASE REQUEST A CURRENT DRAWING WHEN LAYING OUT BOARDS.	SIZE: B	NAME	DATE	DWG NO. S12QHCY13020	SHEET 1 OF 1
	DRAWN	SY	12/20/2018	TITLE: C SERIES LGA, 3.0 x 2.0mm DEVICE, MIXED PITCH, 12+1x 0.40mm H-PINS	
SCALE: VARIOUS	CHECKED	HM	12/21/2018		
UNITS: mmgs	ENG APPR.			PLASTRONICS SOCKETS & CONNECTORS 2601 Texas Drive Irving, TX 75062	
SOLIDWORKS CREATED FILE	MFG APPR.				